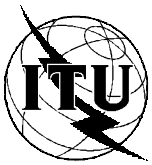

INTERNATIONAL TELECOMMUNICATION UNION

ITU-T

TELECOMMUNICATION
STANDARDIZATION SECTOR
OF ITU

P.50

(03/93)

TELEPHONE TRANSMISSION QUALITY

OBJECTIVE MEASURING APPARATUS

ARTIFICIAL VOICES

ITU-T Recommendation P.50

(Previously "CCITT Recommendation")

FOREWORD

The ITU Telecommunication Standardization Sector (ITU-T) is a permanent organ of the International Telecommunication Union. The ITU-T is responsible for studying technical, operating and tariff questions and issuing Recommendations on them with a view to standardizing telecommunications on a worldwide basis.

The World Telecommunication Standardization Conference (WTSC), which meets every four years, established the topics for study by the ITU-T Study Groups which, in their turn, produce Recommendations on these topics.

ITU-T Recommendation P.50 was revised by the ITU-T Study Group XII (1988-1993) and was approved by the WTSC (Helsinki, March 1-12, 1993).

NOTES

1 As a consequence of a reform process within the International Telecommunication Union (ITU), the CCITT ceased to exist as of 28 February 1993. In its place, the ITU Telecommunication Standardization Sector (ITU-T) was created as of 1 March 1993. Similarly, in this reform process, the CCIR and the IFRB have been replaced by the Radiocommunication Sector.

In order not to delay publication of this Recommendation, no change has been made in the text to references containing the acronyms "CCITT, CCIR or IFRB" or their associated entities such as Plenary Assembly, Secretariat, etc. Future editions of this Recommendation will contain the proper terminology related to the new ITU structure.

2 In this Recommendation, the expression "Administration" is used for conciseness to indicate both a telecommunication administration and a recognized operating agency.

© ITU 1994

All rights reserved. No part of this publication may be reproduced or utilized in any form or by any means, electronic or mechanical, including photocopying and microfilm, without permission in writing from the ITU.

CONTENTS

			Page
1	Introduction		1
2	Scope, purpose and definition		1
	2.1	Scope and purpose	1
	2.2	Definition	1
3	Terminology		2
	3.1	Electrical artificial voice	2
	3.2	Artificial mouth excitation signal	2
	3.3	Acoustic artificial voice	2
4	Characteristics		2
	4.1	Long-term average spectrum	2
	4.2	Short-term spectrum	3
	4.3	Instantaneous amplitude distribution	3
	4.4	Segmental power level distribution	3
	4.5	Spectrum of the modulation envelope	4
	4.6	Time convergence	6
5	Generation method		6
	5.1	Excitation source signal	7
	5.2	Glottal excitation	7
	5.3	Unvoiced sounds	7
	5.4	Power envelope	9
	5.5	Spectrum shaping filter	9
Annex A – Short-term spectrum characteristics of the artificial voice			12
References			15

ARTIFICIAL VOICES

(Melbourne, 1988; amended at Helsinki, 1993)

1 Introduction

The signal here described reproduces the characteristics of human speech for the purposes of characterizing linear and nonlinear telecommunication systems and devices, which are intended for the transduction or transmission of speech. It is known that for some purposes, such as objective loudness rating measurements, more simple signals can be used as well. Examples of such signals are pink noise or spectrum-shaped Gaussian noise, which nevertheless cannot be referred to as "artificial voice" for the purpose of this Recommendation.

The artificial voice is a signal that is mathematically defined and that reproduces the time and spectral characteristics of speech which significantly affect the performances of telecommunication systems [1]. Two kinds of artificial voice are defined, reproducing respectively the spectral characteristics of female and male speech.

The following time and spectral characteristics of real speech are reproduced by the artificial voice:

a) long-term average spectrum;

b) short-term spectrum;

c) instantaneous amplitude distribution;

d) voiced and unvoiced structure of speech waveform;

e) syllabic envelope.

2 Scope, purpose and definition

2.1 Scope and purpose

The artificial voice is aimed at reproducing the characteristics of real speech over the bandwidth 100 Hz-8 kHz. It can be utilized for characterizing many devices, e.g. carbon microphones, loudspeaking telephone sets, nonlinear coders, echo controlling devices, syllabic compandors, nonlinear systems in general.

The artificial voice described in this Recommendation is mainly used for objective evaluation of speech processing systems and devices, in which a single-channel signal with continuous activity (i.e. without pauses) is sufficient for measuring characteristics. An example is evaluation of speech codecs. For objective evaluation that needs two signals with pauses (e.g. evaluation of devices with speech detectors), the artificial conversational speech signal described in Recommendation P.59 should be used.

The use of the artificial voice instead of real speech has the advantage of both being more easily generated and having a smaller variability than samples of real voice.

Of course, when a particular system is tested, the characteristics of the transmission path preceding it are to be considered. The actual test signal has then to be produced as the convolution between the artificial voice and the path response.

2.2 Definition

The **artificial voice** is a signal, mathematically defined, which reproduces all human speech characteristics, relevant to the characterization of linear and nonlinear telecommunication systems. It is intended to give a satisfactory correlation between objective measurements and real speech tests.

3 Terminology

The artificial voice can be produced both as an electric or as an acoustic signal, according to the system or device under test (e.g. communication channels, coders, microphones). The following definitions apply with reference to Figure 1.

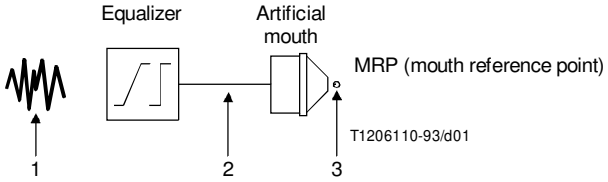

1 Electrical artificial voice
2 Artificial mouth excitation signal
3 Acoustic artificial voice

FIGURE 1/P.50

3.1 Electrical artificial voice

The artificial voice produced as an electrical signal for testing transmission channels or other electric devices.

3.2 Artificial mouth excitation signal

A signal applied to the artificial mouth in order to produce the acoustic artificial voice. It is obtained by equalizing the electrical artificial voice for compensating the sensitivity/frequency characteristic of the mouth.

NOTE – The equalization depends on the particular artificial mouth employed and can be accomplished electrically or mathematically within the signal generation process.

3.3 Acoustic artificial voice

Acoustic signal at the MRP (Mouth Reference Point) of the artificial mouth. It complies with the same time and spectral specifications as the electrical artificial voice.

4 Characteristics

4.1 Long-term average spectrum

The third octave filtered long-term average spectrum of the artificial voice is given in Figure 2 and Table 1, normalized for a wideband sound pressure level of –4.7 dBPa. The table is calculated from the theoretical equation reported in [2].

NOTE – The values of the long-term spectrum of the artificial voice at the MRP can be derived from the equation:

$$S(f) = -376.44 + 465.439(\log_{10} f) - 157.745(\log_{10} f)^2 + 16.7124(\log_{10} f)^3 \quad (4\text{-}1)$$

where $S(f)$ is the spectrum density in dB relative to 1 pW/m^2 sound intensity per Hertz at the frequency f. The definition frequency range is from 100 Hz to 8 kHz.

The curve of the spectrum is shown in Figure 2. The values of $S(f)$ at 1/3 octave ISO frequencies are given in the fourth column of Table 1. The tolerances are given in the fifth column of Table 1. The tolerances below 200 Hz apply onto to the male artificial voice.

The total sound pressure level of the spectrum defined in Equation (4-1) is –4.7 dBPa. However, this spectrum is also applicable for the levels from –19.7 to +10.3 dPBa. In other words, the first term of Equation (4-1) may range from –391.44 to –361.44.

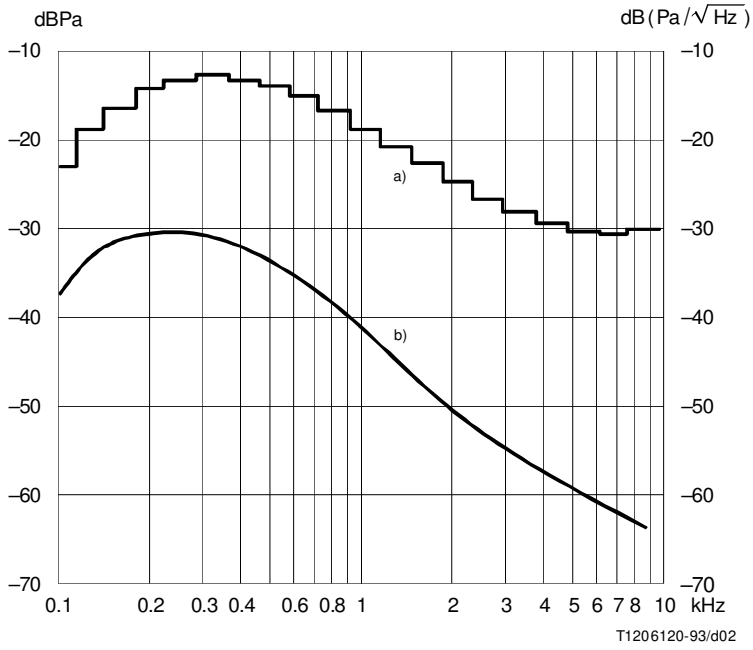

a) Third octave spectrum [Column (3), Table 1].

b) Spectrum density [Column (3)-(2), Table 1].

FIGURE 2/P.50

Long-term spectrum of artificial voice

4.2 Short-term spectrum

The short-term spectrum characteristics of the male and female artificial voices are described in Annex A.

4.3 Instantaneous amplitude distribution

The probability density distribution of the instantaneous amplitude of the artificial voice is shown in Figure 3 [3].

4.4 Segmental power level distribution

The segmental power level distribution of the artificial voice, measured on time windows of 16 ms, is shown in Figure 4. The upper and lower tolerance limits are reported as well.

NOTE – The upper tolerance limit represents the typical segmental power level distribution of normal conversation, while the lower limit represents continuous speech (telephonometric phrases) [4], [5].

TABLE 1/P.50

Long-term spectrum of the artificial voice

1/3 octave center frequency (Hz) (1)	Bandwidth correction factor $10 \log_{10} \Delta f$ (dB) (2)	Sound pressure level (third octave) (dBPa) (3)	Spectrum density (dB) (3) – (2)	Tolerance (dB)
100	13.6	–23.1	–36.7	–
125	14.6	–19.2	–33.8	+3, –6 a)
160	15.6	–16.4	–32	+3, –6 a)
200	16.6	–14.4	–31	+3, –6
250	17.6	–13.4	–31	±3.0
315	18.6	–13.0	–31.6	±3.0
400	19.6	–13.3	–32.9	±3.0
500	20.6	–14.1	–34.7	±3.0
630	21.6	–15.4	–37	±3.0
800	22.6	–17.0	–39.6	±3.0
1000	23.6	–18.9	–42.5	±3.0
1250	24.6	–21.0	–45.6	±3.0
1600	25.6	–23.0	–48.6	±3.0
2000	26.6	–25.1	–51.7	±3.0
2500	27.6	–26.9	–54.5	±3.0
3150	28.6	–28.6	–57.2	±3.0
4000	29.6	–29.8	–59.4	±6.0
5000	30.6	–30.6	–61.2	±6.0
6300	31.6	–30.9	–62.5	±6.0
8000	32.6	–30.5	–63.1	–

a) The given tolerances apply to the long-term spectrum of male speech and must also be complied with by speech shaped noises. However, they do not apply to the female speech spectrum, whose energy content in this frequency range is virtually negligible.

4.5 Spectrum of the modulation envelope

The spectrum of the modulation envelope waveform is shown in Figure 5 and should be reproduced with a tolerance of ± 5 dB on the whole frequency range.

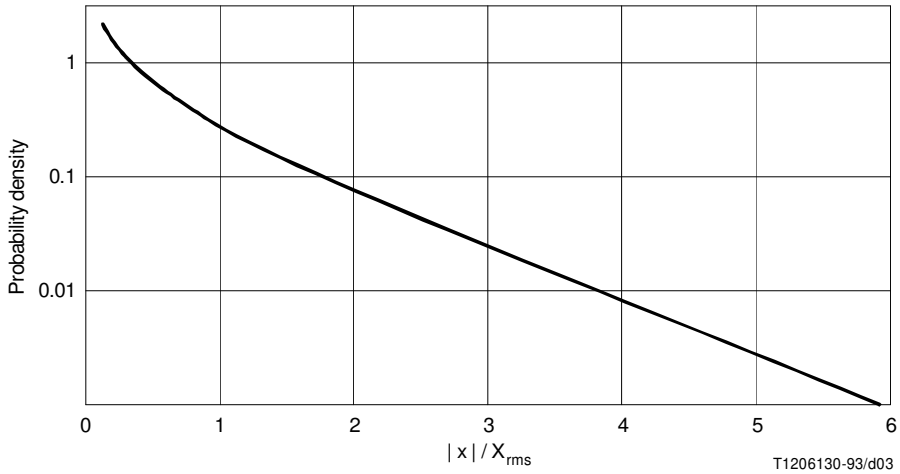

| x | Absolute value of the instantaneous amplitude
X_{rms} Root mean square of the signal

FIGURE 3/P.50

Instantaneous amplitude distribution

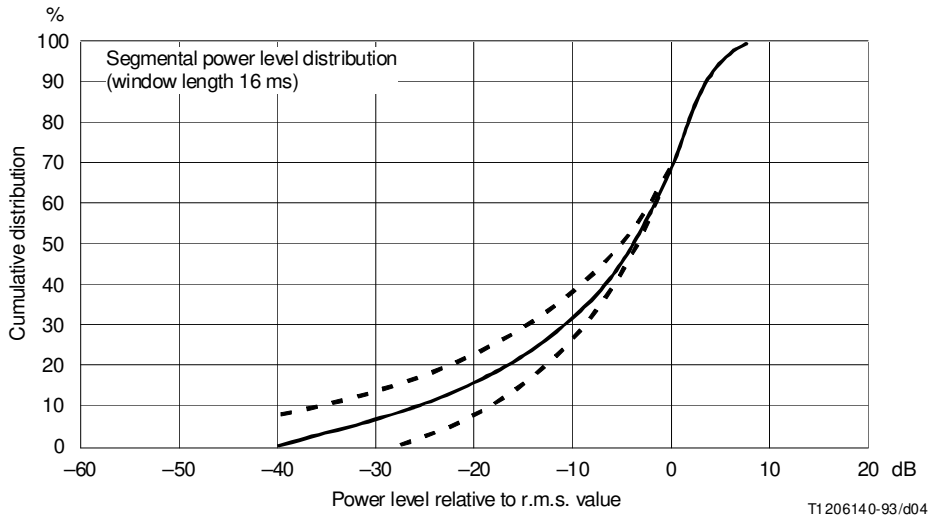

FIGURE 4/P.50

Segmental power level distribution

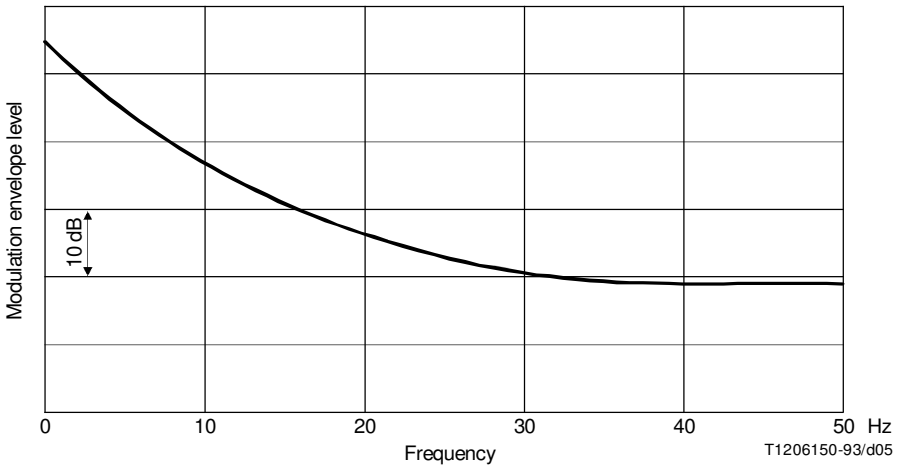

FIGURE 5/P.50

Spectrum of modulation envelope

4.6 Time convergence

The artificial voice must exhibit characteristics as close as possible to real speech. Particularly, it should be possible to obtain the long-term spectrum and amplitude distribution characteristics in 10 s.

5 Generation method

Figure 6 shows a block diagram of the generation process of the artificial voice. It is generated by applying two different types of excitation source signals, a glottal excitation signal and a random noise, to a time-variant spectrum shaping filter. The artificial voice generated by the glottal excitation signal and by the random noise corresponds respectively to voiced and unvoiced sounds. The frequency response of the spectrum shaping filter simulates the transmission characteristics of the vocal tract.

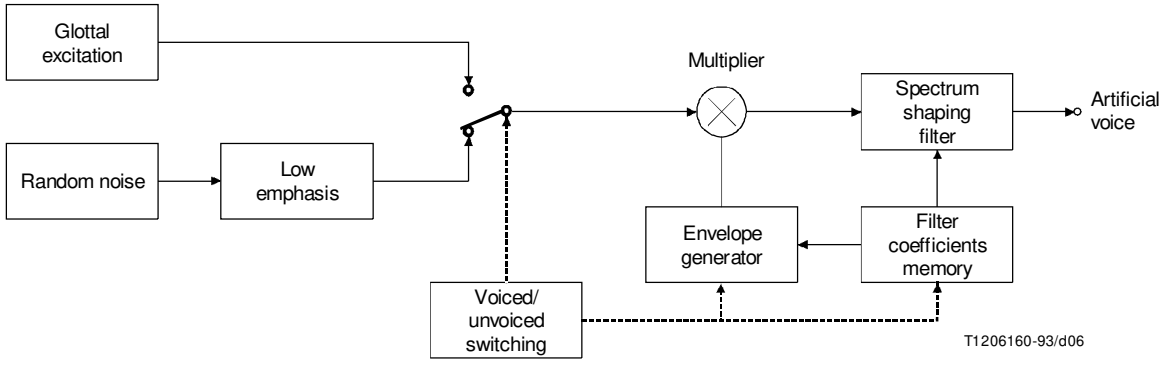

FIGURE 6/P.50

Artificial voice generation process

5.1 Excitation source signal

The artifical voice is obtained by randomly alternating four basic unit elements, each containing voiced and unvoiced segments. While one unit element starts with an unvoiced sound, followed by a voiced one, the other three elements start with a voiced sound, followed by an unvoiced one and end with a voiced sound again (see also Figure 9). The ratio of the unvoiced sound duration T_{uv} to the total duration of voiced segments T_v for each unit element is 0.25. The duration $T = T_{uv} + T_v$ of unit elements varies according to the following equation:

$$T = -3.486 \ln(r)$$

where r denotes a uniformly distributed random number ($0.371 \leq r \leq 0.609$).

The time lengths of the voiced and unvoiced sounds of the four unit elements are as follows:

Element a: Unvoiced (T_{uv}); Voiced (T_v)

Element b: Voiced (T_v/4) + Unvoiced (T_{uv}) + Voiced (3 T_v/4)

Element c: Voiced (T_v/2) + Unvoiced (T_{uv}); Voiced (T_v/2)

Element d: Voiced (3 T_v/4) + Unvoiced (T_{uv}) + Voiced (T_v/4).

Unit elements shall be randomly iterated for at least 10 s in order to comply with the artificial voice characteristics as specified in clause 4.

5.2 Glottal excitation

The glottal excitation signal is a periodic waveform as shown in Figure 7. The pitch frequency ($1/T_0$ in Figure 7) varies according to the variation pattern shown in Figure 8 during the period T_v. The starting value of the pitch frequency (F_s in Figure 8) is determined according to the following relationships:

$F_s = F_c - 31.82\ T_v + 39.4\ R$ for the male artificial voice

$F_s = F_c - 51.85\ T_v + 64.2\ R$ for the female artificial voice.

where F_c and R respectively denote the center frequency and a uniformly distributed random variable ($-1 < R < 1$). F_c is 128 Hz for the male artificial voice and 215 Hz for the female artificial voice. In the trapezoid of the pitch frequency variation pattern, the area of the trapezoid above F_c should be equal to that below F_c (shaded in Figure 8). For the elements b), c) and d) in Figure 7 the pitch frequency variation pattern applies to the combination of the two voiced parts, irrespectively of where the unvoiced segment is inserted.

5.3 Unvoiced sounds

The transfer function of the low-pass filter located after the random noise generator (low emphasis) is $1/(1 - z^{-1})$, where z^{-1} denotes the unit delay.

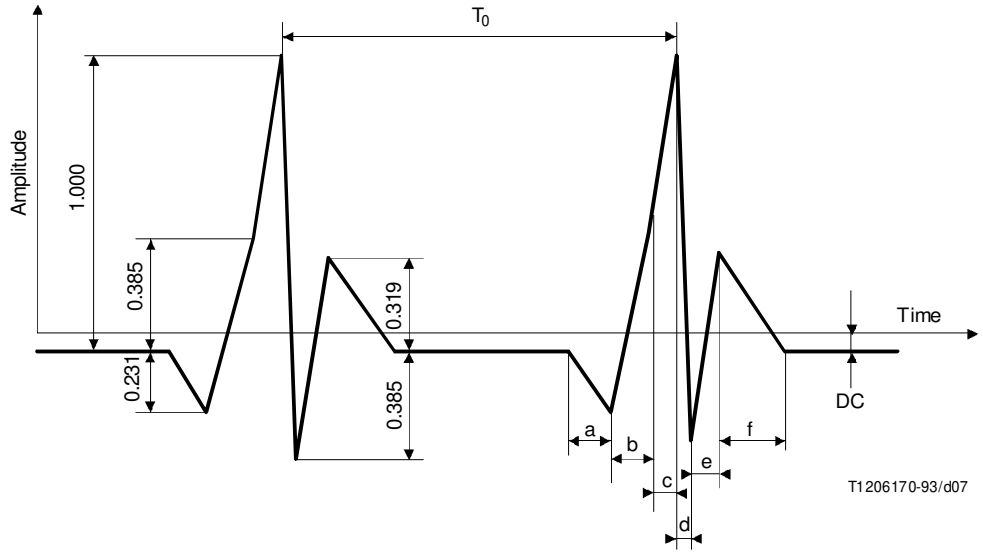

a = 0.375 ms
b = 0.5 ms
c = e = 0.3125 ms
d = 0.1875 ms
f = 0.625 ms
DC = $1.176/(16000\,T_0 - 23)$ for male
$1.176/(16000\,T_0 - 11.5)$ for female

FIGURE 7/P.50

Glottal excitation signal

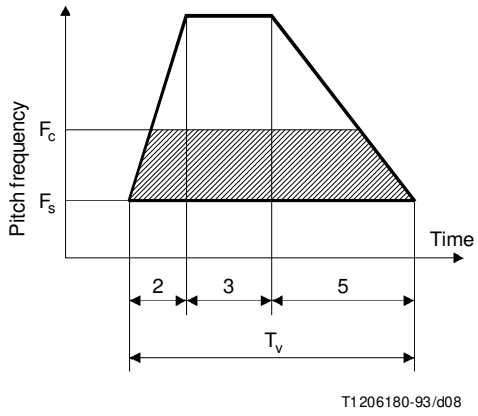

FIGURE 8/P.50

Pitch frequency variation pattern

5.4 Power envelope

The power envelope of each unit element of the excitation source signal is so controlled that the short-term segmental power (evaluated over 2 ms intervals) of the artificial voice varies according to the patterns shown in Figure 9. This is obtained by utilizing the following relationship providing input and output signals of the spectrum shaping filter:

$$P_{in} = P_{out} \prod_{i=1}^{12} (1 - k_i^2)$$

where

P_{in} is the input power to the spectrum shaping filter,

P_{out} is the output power from the spectrum shaping filter,

k_i is the ith coefficient of the spectrum shaping filter.

The rising, stationary and decay times of each trapezoid of Figure 9 shall be mutually related by the same proportionality coefficients (2 : 3 : 5) of the pitch frequency variation pattern shown in Figure 8. For each unit element, the average power of unvoiced sounds (P_{uv}) shall be 17.5 dB less than the average power of voiced sounds (P_v).

5.5 Spectrum shaping filter

The spectrum shaping filter has a 12th order lattice structure as shown in Figure 10. Sixteen groups, each of 12 filtering coefficients ($k_1 - k_{12}$), are defined; thirteen groups shall be used for generating the voiced part, while three groups shall be used for generating the unvoiced part. These coefficients are listed in Table 2 both for male and female artificial voices.

The twelve filter coefficients shall be updated every 60 ms while generating the signal. More precisely, during each 60 ms period the actual filtering coefficients must be adjourned every 2 ms, by linearly interpolating between the two sets of values adopted for subsequent 60 ms intervals. In the voiced sound part, each of 13 groups of coefficients shall be chosen at random once every 780 ms (= 60 ms × 13), and in the unvoiced sound part each of 3 groups of coefficients shall be chosen at random once every 180 ms (= 60 ms × 3).

NOTE – The described implementation of the shaping filter should be considered as an example and is not an integral part of this Recommendation. Any other implementation providing the same transfer function can be alternatively used.

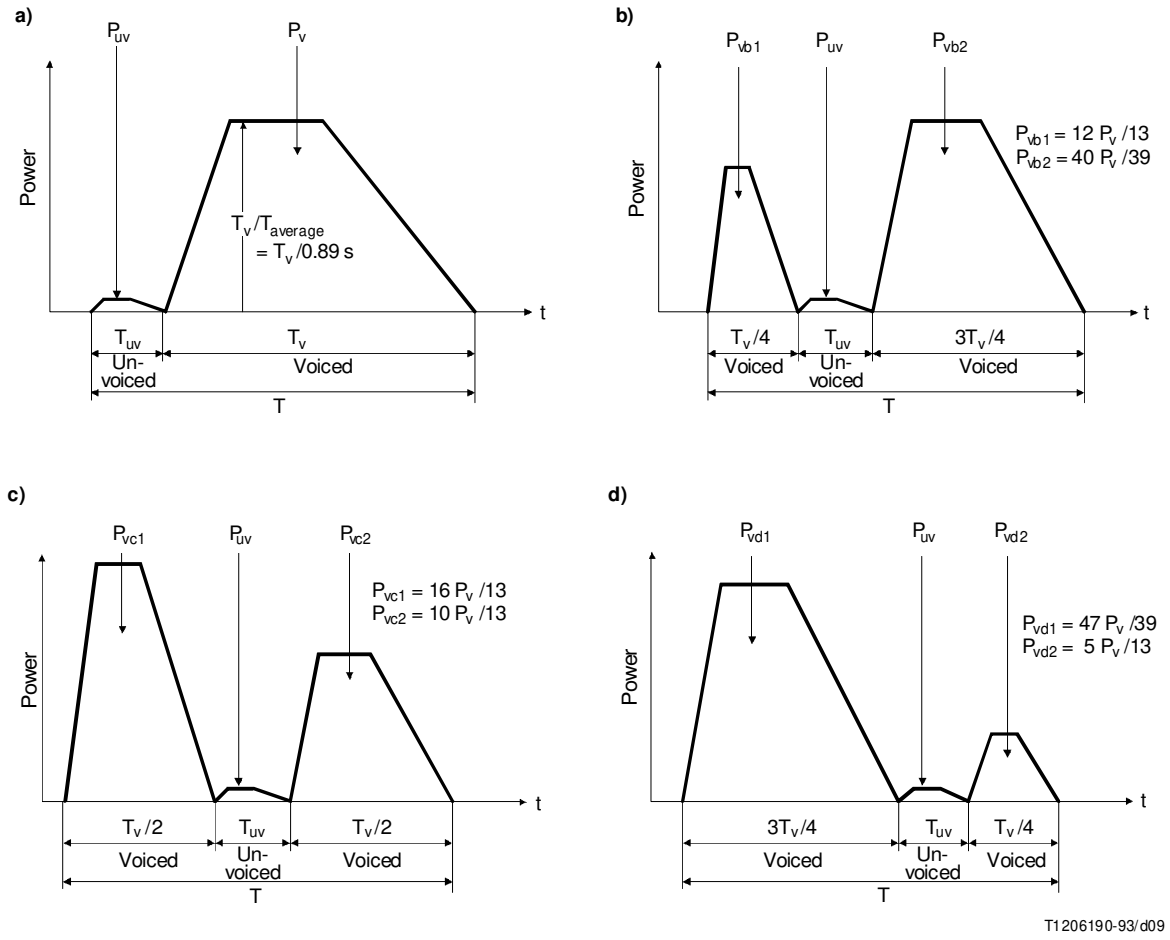

FIGURE 9/P.50

Short-term power variation patterns of the four unit elements used to generate the artificial voice

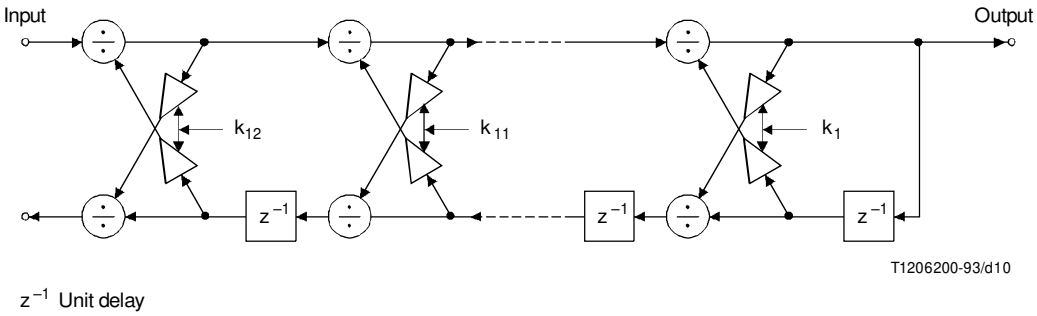

FIGURE 10/P.50

Spectrum shaping filter

TABLE 2a/P.50

Coefficients k_i for male artificial voice

		k_1	k_2	k_3	k_4	k_5	k_6	k_7	k_8	k_9	k_{10}	k_{11}	k_{12}
	1	–0.471	–0.108	0.024	–0.048	0.140	0.036	0.054	0.004	0.123	0.044	0.099	–0.003
Unvoiced	2	–0.284	–0.468	0.030	0.090	0.124	–0.020	0.087	0.067	0.131	0.011	0.076	–0.024
	3	–0.025	–0.496	–0.176	0.162	0.236	–0.012	0.068	0.001	0.096	0.029	0.086	–0.018
	1	0.974	0.219	0.025	–0.123	–0.132	–0.203	–0.103	–0.174	–0.079	–0.153	–0.010	–0.061
	2	0.629	–0.152	–0.138	–0.142	–0.118	–0.135	0.147	0.019	0.077	–0.040	0.029	–0.007
	3	0.599	–0.119	0.067	0.051	0.103	0.023	0.106	0.036	–0.006	–0.133	–0.052	–0.094
	4	0.164	–0.364	–0.248	–0.076	0.168	0.072	0.103	0.045	0.112	0.010	0.048	–0.034
	5	0.842	0.022	0.171	0.173	0.067	–0.057	0.089	–0.045	–0.039	–0.134	–0.034	–0.122
	6	0.933	–0.537	–0.137	–0.161	–0.216	–0.139	0.115	–0.042	0.027	–0.163	0.102	–0.107
Voiced	7	0.937	–0.413	0.132	–0.059	–0.103	–0.134	0.047	–0.115	–0.105	–0.097	0.039	–0.108
	8	0.965	–0.034	0.032	0.001	–0.107	–0.189	–0.057	–0.175	–0.109	–0.163	–0.003	–0.055
	9	0.870	–0.476	–0.016	–0.136	–0.125	–0.107	0.091	–0.008	0.021	–0.128	0.042	–0.069
	10	0.686	–0.030	0.178	0.197	0.155	–0.026	0.078	0.004	–0.001	–0.128	–0.004	–0.102
	11	0.963	–0.232	0.086	–0.018	–0.147	–0.192	–0.040	–0.179	–0.144	–0.133	0.042	–0.042
	12	0.930	–0.461	0.071	–0.144	–0.122	–0.096	0.034	–0.066	–0.021	–0.171	0.067	–0.091
	13	0.949	–0.334	0.143	–0.040	–0.112	–0.161	0.010	–0.156	–0.123	–0.119	0.049	–0.070

TABLE 2b/P.50

Coefficients k_i for female artificial voice

		k_1	k_2	k_3	k_4	k_5	k_6	k_7	k_8	k_9	k_{10}	k_{11}	k_{12}
	1	0.488	–0.388	0.145	0.053	0.122	0.027	0.135	0.035	0.080	0.017	0.068	0.028
Unvoiced	2	–0.093	–0.444	–0.102	0.121	0.154	0.009	0.102	–0.031	0.084	0.019	0.101	–0.020
	3	–0.709	–0.179	0.134	0.007	0.142	0.027	0.099	0.000	0.115	0.007	0.075	–0.037
	1	0.355	–0.247	–0.092	–0.043	0.032	0.046	0.113	–0.023	0.071	–0.030	–0.000	–0.116
	2	0.976	0.150	–0.062	–0.187	–0.172	–0.200	–0.122	–0.207	–0.054	–0.127	0.012	–0.111
	3	0.737	–0.324	–0.175	–0.197	–0.153	0.023	0.110	–0.018	0.040	–0.062	0.034	–0.091
	4	0.598	0.234	0.126	0.011	–0.005	–0.026	0.131	0.032	0.073	–0.063	0.011	–0.088
	5	0.808	0.118	0.262	0.139	0.063	–0.024	0.001	–0.184	–0.056	–0.100	0.014	–0.115
	6	0.914	–0.500	–0.051	–0.115	–0.211	–0.012	–0.077	–0.179	0.064	–0.102	0.037	–0.092
Voiced	7	0.933	–0.359	0.089	–0.107	–0.178	–0.050	–0.137	–0.206	0.046	–0.088	–0.004	–0.074
	8	0.966	–0.023	0.044	–0.105	–0.178	–0.195	–0.150	–0.233	–0.045	–0.092	0.029	–0.097
	9	0.870	–0.469	–0.244	–0.107	–0.140	–0.037	0.084	–0.131	0.021	–0.066	–0.003	–0.091
	10	0.673	–0.292	0.392	0.158	0.143	0.160	0.019	–0.281	–0.105	–0.195	–0.156	–0.185
	11	0.962	–0.191	0.030	–0.089	–0.207	–0.133	–0.141	–0.263	0.007	–0.054	0.014	–0.074
	12	0.879	–0.340	0.046	–0.049	–0.071	–0.024	–0.039	–0.188	0.017	–0.078	–0.014	–0.117
	13	0.941	–0.258	0.122	–0.073	–0.163	–0.089	–0.151	–0.250	0.025	–0.062	–0.006	–0.093

Annex A

Short-term spectrum characteristics of the artificial voice

(This annex forms an integral part of this Recommendation)

The artificial voice is generated by randomly selecting each of sixteen short-term spectrum patterns once every 960 ms (= 60 ms × 16 patterns). The spectrum density of each pattern is provided by Equation (A-1) and Table A.1, and the short-term spectrum of the signal during the 60 ms interval occurring between any two subsequent pattern selections varies smoothly from one pattern to the next.

NOTE – The spectrum patterns in Equation (A-1) and Table A.1 are expressed in power normalized form.

$$\text{Spectrum density } S_i(f) = \frac{1}{A_{io} + 2\sum_{j=1}^{12} A_{ij}\,[\cos(2\pi jf)]}, \quad i = 1, 2, \ldots 16 \tag{A-1}$$

TABLE A.1a/P.50

Coefficients A_{ij} for male artificial voice

i	j												
	0	1	2	3	4	5	6	7	8	9	10	11	12
1	2.09230	–1.33222	1.32175	–1.14200	0.99352	–0.94634	0.72684	–0.63263	0.41196	–0.42858	0.22070	–0.19746	0.10900
2	9.34810	–8.55934	7.35732	–6.35320	5.33999	–4.47238	3.62417	–2.85246	2.12260	–1.49424	0.93988	–0.44998	0.12400
3	11.69068	–10.91138	9.46588	–8.11729	6.94160	–5.90977	4.95137	–3.89587	2.88750	–1.97671	1.14892	–0.50255	0.12100
4	12.56830	–11.81209	10.36030	–8.82879	7.37947	–6.01017	4.66740	–3.46913	2.42182	–1.60880	0.91652	–0.39648	0.12000
5	6.83438	–6.18275	5.59089	–4.71866	4.06004	–3.44767	2.65380	–2.12140	1.50334	–1.07904	0.64553	–0.31816	0.11500
6	12.37251	–11.52358	9.89962	–8.31774	6.99062	–5.86272	4.69809	–3.56806	2.53340	–1.70522	0.99232	–0.45403	0.13400
7	21.07637	–19.62125	16.56781	–13.67518	11.41379	–9.61940	7.93529	–6.32841	4.92443	–3.53539	2.09095	–0.86543	0.18100
8	30.77371	–29.17365	25.52254	–21.51978	17.80583	–14.30488	10.87190	–7.71572	5.14643	–3.20113	1.72149	–0.68054	0.14400
9	4.18618	–3.36611	3.36793	–2.92133	2.38452	–2.06047	1.57550	–1.34240	0.84994	–0.70462	0.38685	–0.21857	0.12100
10	14.12359	–13.14611	11.25804	–9.47510	7.97588	–6.70717	5.44803	–4.23843	3.10807	–2.12879	1.25096	–0.53230	0.12600
11	26.36971	–24.95984	21.80496	–18.41045	15.30642	–12.49415	9.84879	–7.40287	5.29262	–3.43906	1.84980	–0.71546	0.14800
12	11.50808	–10.74609	9.34328	–7.91953	6.66959	–5.54500	4.34328	–3.27036	2.33714	–1.61333	0.96597	–0.44666	0.13500
13	5.32020	–4.61998	4.29145	–3.62118	3.01310	–2.67071	2.13992	–1.72147	1.22163	–0.93163	0.53317	–0.28989	0.11900
14	20.61945	–19.39682	16.80034	–14.14817	11.84307	–9.78712	7.73534	–5.77921	4.06200	–2.66324	1.49831	–0.59887	0.12600
15	30.02641	–28.42244	24.75314	–20.70178	16.98199	–13.72247	10.81050	–8.20966	5.94148	–3.90501	2.11507	–0.81306	0.16400
16	27.62370	–26.17896	22.93678	–19.42253	16.18997	–13.17171	10.19859	–7.42299	5.07437	–3.21481	1.73980	–0.67818	0.14000

TABLE A.1b/P.50

Coefficients A_{ij} for female artificial voice

i	j												
	0	1	2	3	4	5	6	7	8	9	10	11	12
1	8.92953	–8.28905	7.23150	–6.06571	5.06663	–4.16883	3.34820	–2.64174	1.91152	–1.27122	0.74358	–0.35347	0.13100
2	9.11050	–8.29868	7.05018	–6.03862	5.02156	–4.15784	3.37442	–2.70084	2.04257	–1.41928	0.90339	–0.47240	0.14100
3	13.69058	–12.75539	10.87390	–8.98976	7.28838	–5.87662	4.78110	–3.72852	2.71831	–1.81828	1.06757	–0.48907	0.12900
4	6.95118	–6.29134	5.35757	–4.64910	3.87250	–3.23132	2.69856	–2.12367	1.58326	–1.13885	0.70609	–0.37778	0.12800
5	2.73454	–1.80664	1.95283	–1.79464	1.43897	–1.31656	0.93268	–0.87398	0.53694	–0.47562	0.24159	–0.15438	0.11800
6	10.82358	–10.07808	8.78565	–7.43643	6.14765	–5.10041	4.10027	–3.23241	2.34220	–1.54676	0.91918	–0.45059	0.14200
7	21.58481	–19.92676	16.21532	–12.43566	9.61057	–7.93982	6.97363	–6.00866	4.68271	–3.12797	1.70804	–0.67499	0.14200
8	23.73912	–22.20897	18.74416	–15.03715	11.99248	–9.85513	8.27112	–6.72826	4.94335	–3.10450	1.60004	–0.61090	0.12900
9	4.97162	–4.27705	4.01380	–3.38500	2.78457	–2.45010	1.98057	–1.63020	1.18104	–0.80108	0.51528	–0.29138	0.12500
10	13.37598	–12.45509	10.72295	–8.97928	7.35893	–6.05438	4.88819	–3.86108	2.85164	–1.88876	1.11490	–0.52260	0.13800
11	16.48817	–15.22287	12.62125	–10.23900	8.46966	–7.23692	6.24648	–5.09752	3.77465	–2.46950	1.37404	–0.57453	0.13200
12	18.22041	–17.17540	15.09489	–12.55171	10.24976	–8.45903	6.71874	–5.19063	3.52021	–2.10167	1.08066	–0.41880	0.14300
13	1.32602	–0.31718	0.44277	–0.47070	0.32935	–0.41555	0.25775	–0.32079	0.13791	–0.23640	0.10103	–0.10136	0.11500
14	16.90640	–15.73723	13.30151	–10.82887	8.78690	–7.34521	6.21516	–5.11100	3.80281	–2.43990	1.33506	–0.55971	0.12900
15	21.73895	–20.42432	17.51117	14.44152	11.79131	–9.66735	7.90433	–6.19508	4.41275	–2.75545	1.46525	–0.59916	0.14000
16	21.04832	–19.72714	16.81197	–13.70183	11.07189	–9.12707	7.57941	–6.08064	4.40471	–2.74320	1.43897	–0.58079	0.13300

References

[1] CCITT Contribution COM XII-No. 76, Study Period 1981-1984.

[2] CCITT Contribution COM XII-No. 108, Study Period 1981-1984.

[3] CCITT Contribution COM XII-No. 11, Study Period 1981-1984.

[4] CCITT Contribution COM XII-No. 150, Study Period 1981-1984.

[5] CCITT Contribution COM XII-No. 132, Study Period 1981-1984.